nonlinearcircuits

CHOPPER / BI-DI SWITCH

build notes version 1

24 Oct 2014

Please note on version 1 PCBs two resistor values need to be changed from what is marked on the PCB and an extra resistor must be added.

These mods are to adjust hysteresis to the comparator of the Chopper. At *some* pot settings there will still be some jitter, this is desirable☺. The mods are described below.

BOM

Please note, the PCB is designed for thru-hole resistors standing upright, but it is very easy to solder on 0805 SMD resistors instead, if you prefer. 1206 are possible too, but a bit of a squeeze.

If you think you will need to experiment with some resistor values, such as those for RL or in the hysteresis section, it is much easier to use 0805 resistors. These can be removed and replaced very easily with no need of solder suckers or solder wick, just heat them up and flick them off.

component	quantity	
100k pot	1	
100k – 1M pot	1	*see notes*
TL074	2	SMT SOIC - 0.050 pitch
DG411	1	SMT SOIC - 0.050 pitch (see notes)
BC547	2	any general NPN okay, pinout suits BC547
1uF cap	1	4.5mm pin spacing
47nF-100nF caps	2	2.5mm pin spacing, for decoupling, **marked 'c' on PCB**
10uF (35v or higher rating)	2	2.5mm pin spacing, for decoupling
3.5mm sockets	11	Kobiconn style (ones from Tayda okay)
LEDs	4	
10 pin power connector	1	
1N4148	4	any regular signal diodes ok
thru-hole resistors		
10R	2	
RL	4	for LED brightness, *choose to suit LED types*
470R	3	
1k	8	
10k	8	
22k	1	marked 10k on PCB *see notes*
100k	16	
120k	1	
470k	1	marked '2M2*' on PCB

NOTES

Building

Probably best to solder in the chips 1st, it can be difficult to do so after everything else is on the board.

pots

These ones from Tayda will do, though be careful none of the metal flaps/tabs are sitting on PCB traces, trim them back if so. You can find many brands of this type of pot, Alpha make nice ones too.

The Slew pot can be up to 1M, this will change the behaviour of the Chopper quite a lot, it depends if you plan to use it for CV or audio. A 1M pot will slow things down and is best for CV

http://www.taydaelectronics.com/potentiometer-variable-resistors/rotary-potentiometer/linear/100k-ohm-linear-taper-potentiometer-round-shaft-pcb-9mm.html

DG411

There are a number of analogue switches, with the same pinout, that will *probably* work in this circuit. I have not tested others but feel free. Some types do not require the voltage offset given by the 120k and 100k resistors that sit between the 'chop in 1' and 'chop in 2' sockets, so leave these off if the chip you have is NC on pin 12.

MODS for version 1 PCBs only (these have been implemented on version 2)

Two resistor values need to be changed and a resistor needs to jump across two points.

1. The resistor marked '2M2*' should be replaced with 470k. *Install it so the exposed leg is on the left as you will need to solder a 10 k resistor to this point in step 3.*
2. A 100k resistor, indicated below, should be replaced with 22k
3. A 10 k resistor needs to be soldered from the left pad of the 470k resistor to +V, easiest is the closest pin of the nearby transistor. See figure 1 below.
4. Not essential, but worthwhile. Add a jumper from the 'Comparator in' socket to the switch of 'chop in 1'. The switch of 'chop in 2' is tied to ground. So the circuit can be operated with just a CV into 'comp in'. At some settings the module will self-oscillate and can be used as a simple LFO. See figure 2 for the connection diagram.

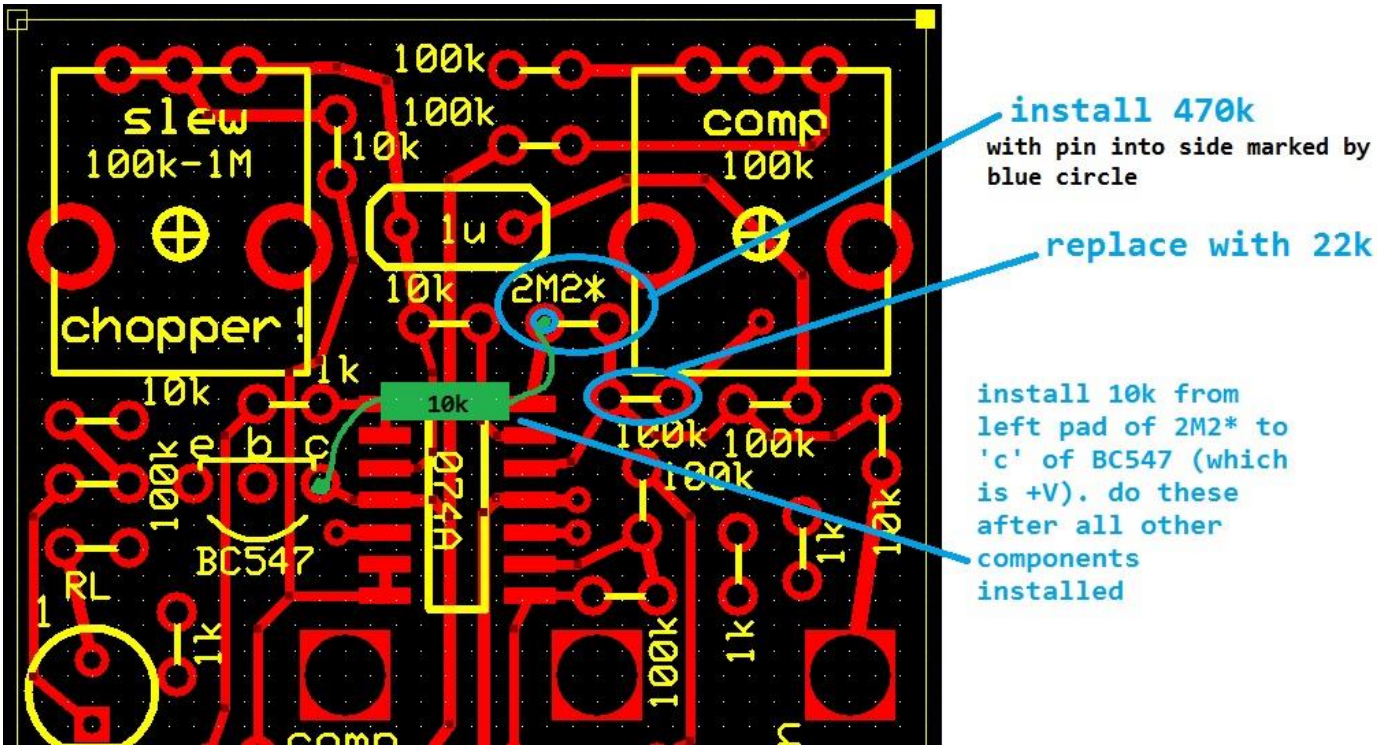

figure 1

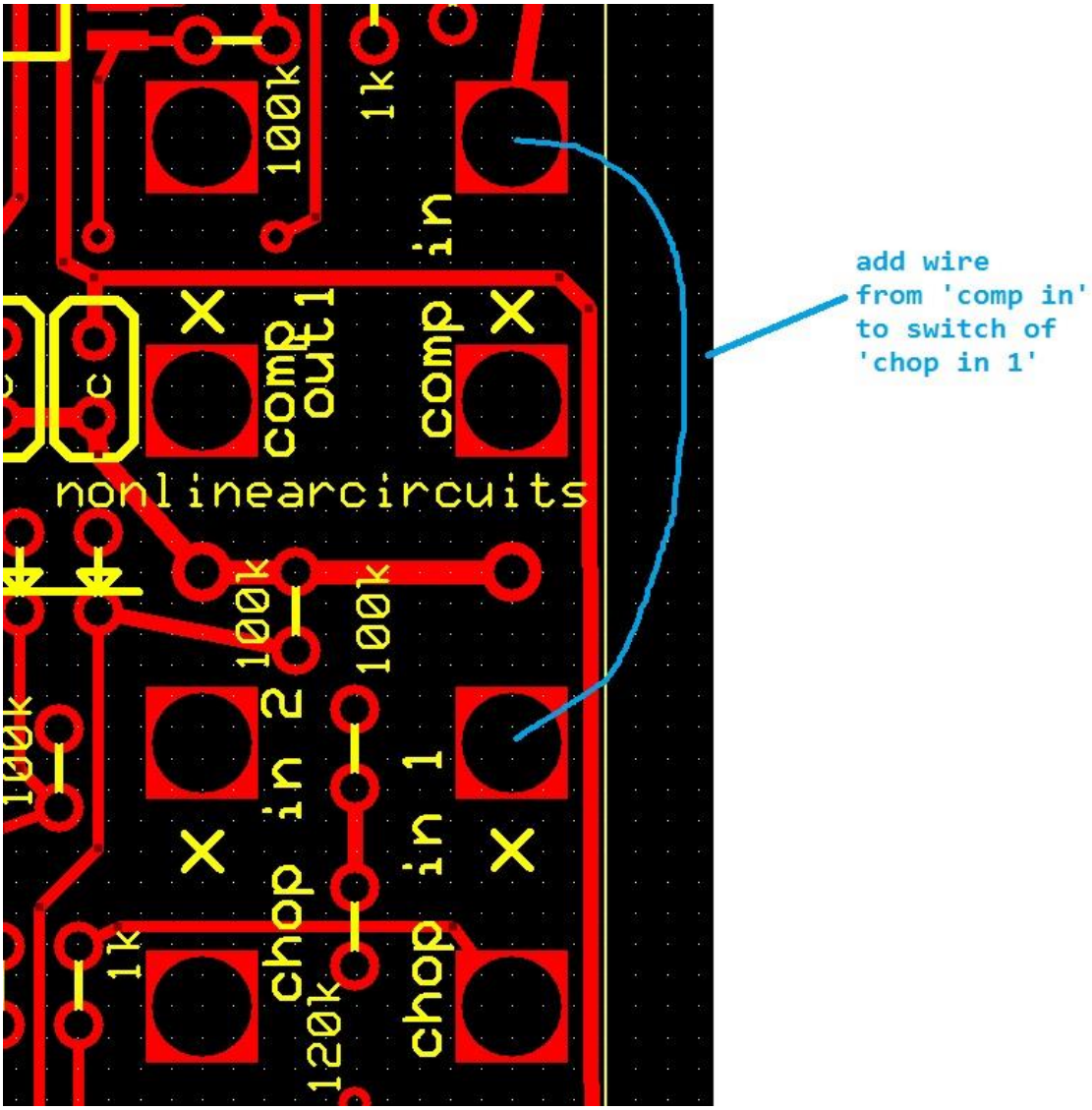

figure 2

What is the Chopper?

The concept came from a 1975 paper titled – 'A nonlinear modulator using delta principles' by S.K. Mullick and K.R Srivathsan. The block diagram for the circuit is shown below:

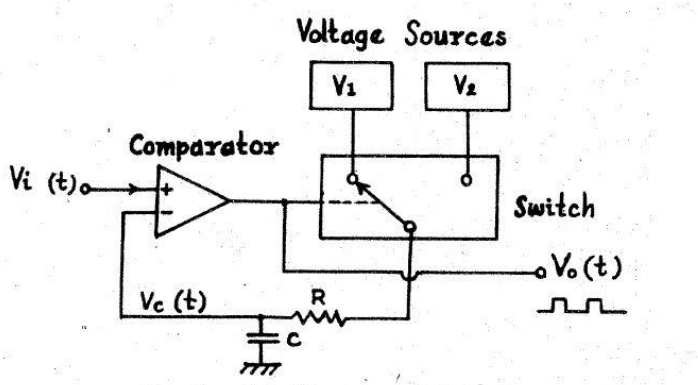

Fig. 1. Nonlinear modulator.

It can be seen that the signal being passed thru the switch is also being sent to the comparator via a slew section and used to decide when the switch will flip. The actual circuit is of course more complex than this, as seen below.

The comparator can be set with a pot and then modulated with a CV. There are two gate outputs from the comparator, when one is high the other is low. There is the switch output and the slewed output.

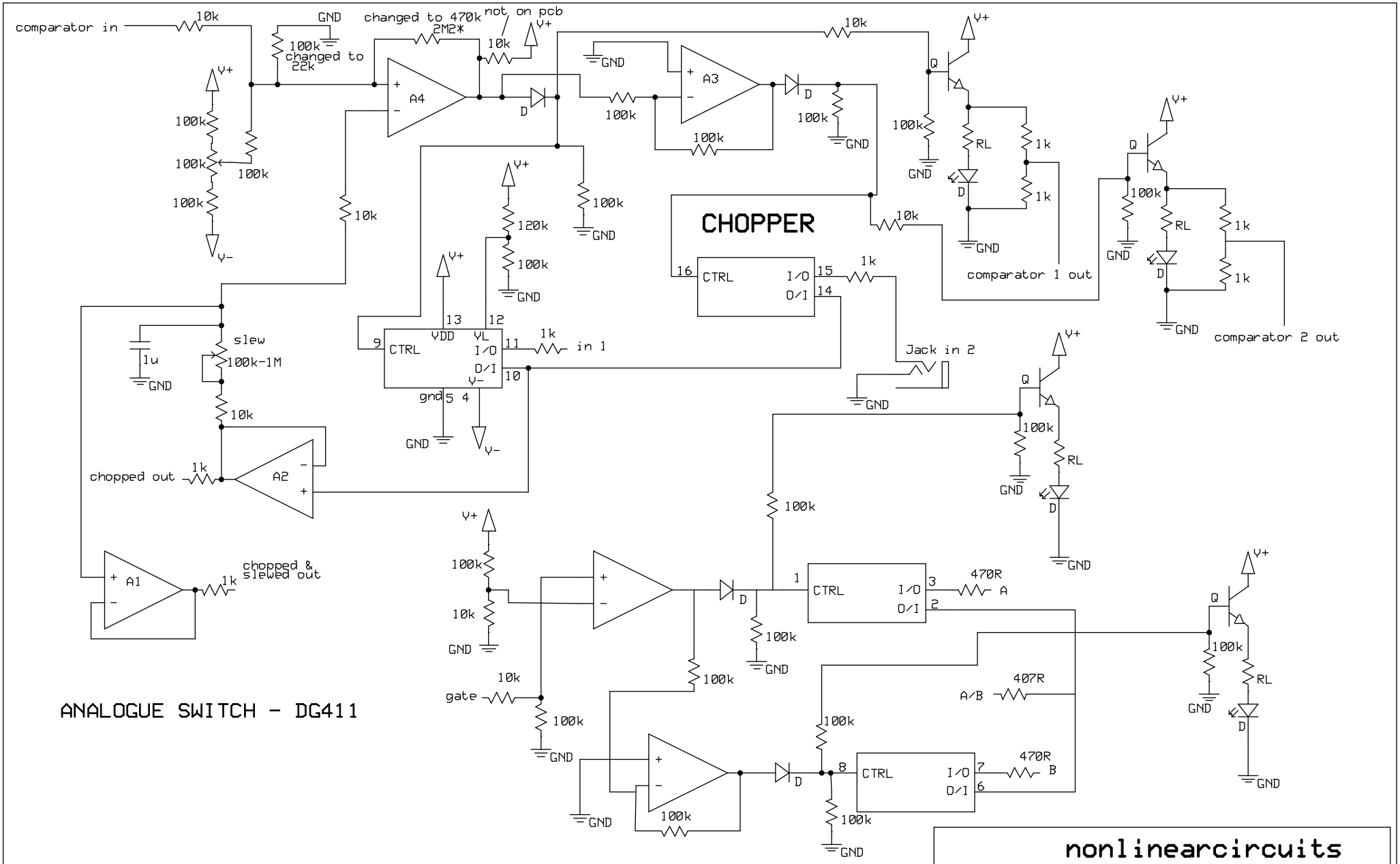
comparator in
10k
GND
100k
changed to 22k
changed to 470k
2M2*
not on pcb
10k
V+
A4
D
100k
A3
100k
10k
Q
RL
1k
comparator 1 out
comparator 2 out
CHOPPER
CTRL
I/O
O/I
16
15
14
1k
Jack in 2
120k
slew
100k-1M
1u
10k
chopped out
A2
A1
chopped & slewed out
13
12
9
VDD
VL
11
in 1
10
gnd
5
4
V-
1
3
2
470R
A
A/B
407R
8
7
6
B
gate
ANALOGUE SWITCH - DG411
BI-DI SWITCH
nonlinearcircuits
Chopper/bi-di switch
AndrewF
Rev 1.0
18/08/2014
Page # or name